Hillmar
Hillmar Industries Ltd.
7371 Vantage Way
Delta, BC V4G 1C9
P:604 946-7115 F:604 946-0329
info@hillmar.com www.hillmar.com

COUPLING GKM
GKM-ND-200-LSH-MSH
SPECIFICATION SHEET
SLS & MKTG
ENGLISH

Sheet Number:	
Job Number:	
Form Number:	429-630-36495PT

Company / Project Reference:	Date.:	Page.:	Document Package No.:	Rev.:
		1 OF 1		

Inventor Drawing

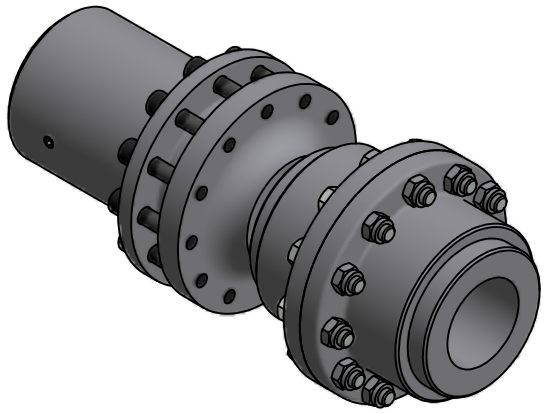

FEATURE	CODE
Gear coupling	GKM
No disc	ND
Coupling size (Hub OD)	200
Load side	LSH
Motor side	MSH
Maximum coupling torque (Nm)	5000

Example for ordering	GKM-ND-200-LSH-MSH

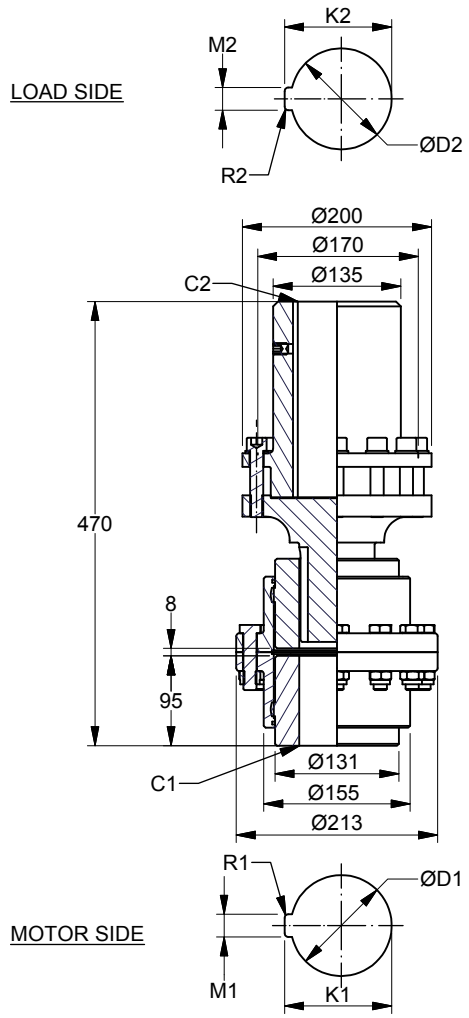

TECHNICAL DATA

Hub bore size MIN. (mm)	50
D1 MAX. (mm)	90
D2 MAX. (mm)	95
Moment of inertia (kgm^2)	0.859
Mounting bolts	12 x M14
Bolt tightening torque (Nm)	200
MAX. coupling torque TkMAX (Nm)	5000
NOM. coupling torque TkN (Nm)	2000
MAX. coupling speed (RPM)	2750
Weight (kg)	50,17

CUSTOMER SPECIFICATIONS

Motor side	Load side
D1:_____mm	D2:_____mm
M1:_____mm	M2:_____mm
K1:_____mm	K2:_____mm
R1:_____mm	R2:_____mm
C1:_____mm	C2:_____mm

NOTES

Coupling balancing grade ISO 1940-G6.3 is guaranteed for all coupling parts.

All figures are nominal figures only

All dimensions are in millimeters

Document Template #710-101-62058

** ALL TECHNICAL DATA IS SUBJECT TO CHANGE WITHOUT NOTICE **
Hillmar works have a fully registered ISO 9001-2008 quality assurance programme (QCB #01-1525)

C:\TEMP\a3f49bb3-e10c-4cd0-aed8-26c1c4c1b337\8000052817 0\HILLMAR\HILLMAR PRODUCTION\04 THRUSTER DB\0700-4\07004005 PKM-GKM-RKSM-RKX\SPC-SHT-PKM-GKM-RKSM-RKX\02 GKM\36495 GKM-ND-200-LSH-MSH.idw